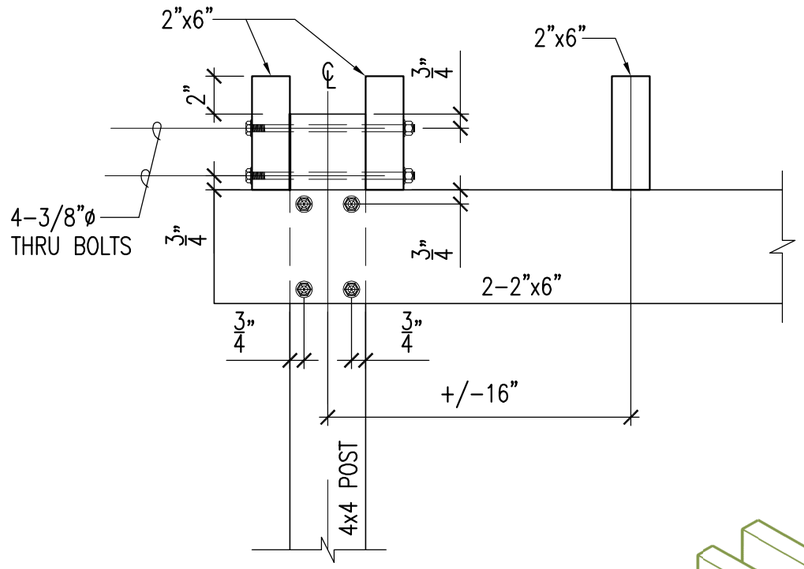

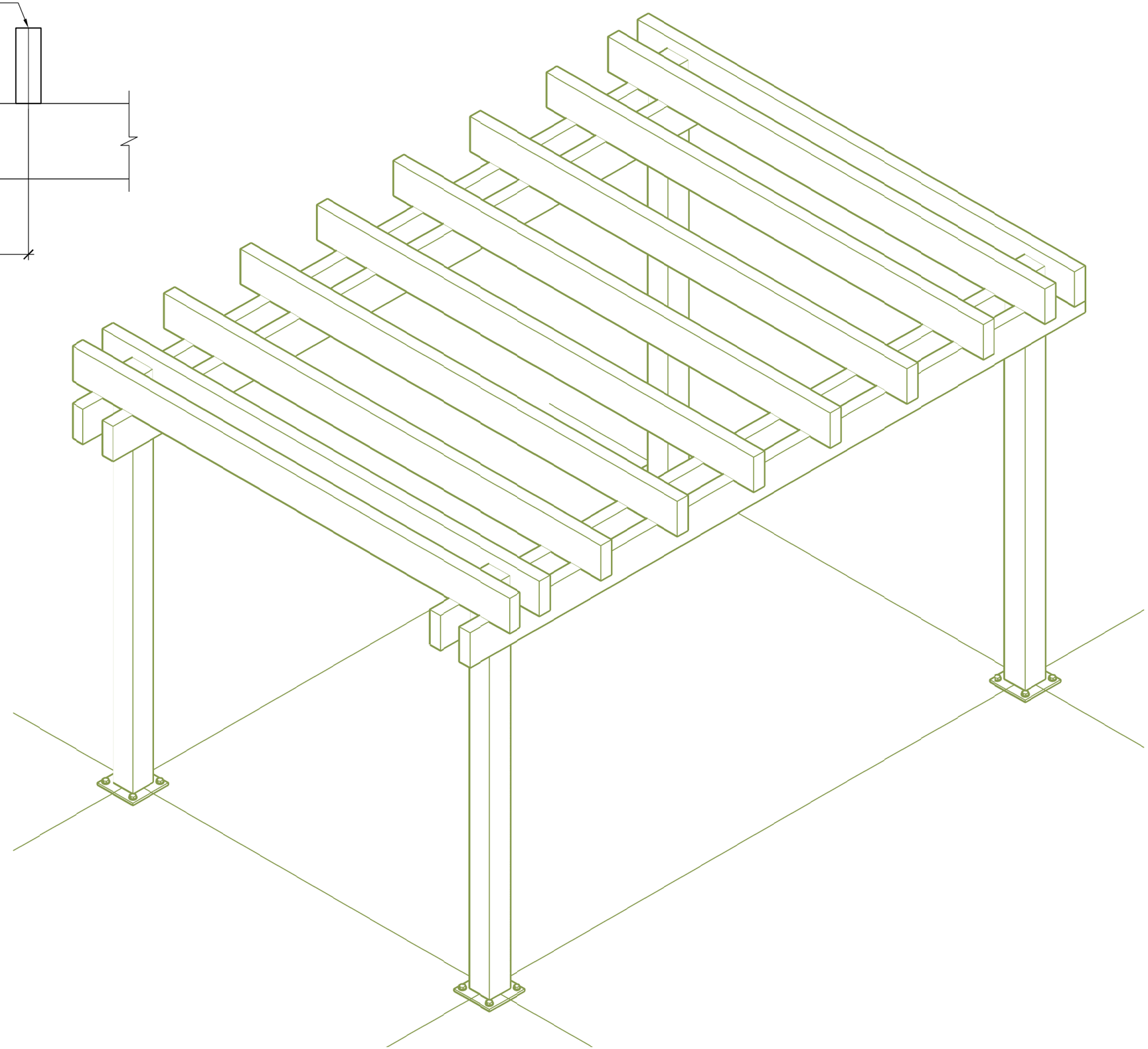

P:\2014 JOBS\14032 Skylight Wheeler Army Airfield\JV4 11.dwg, 4/2/2014 11:45:38 AM, CutePDF Writer.pc3